NEOKP、NEOKO Serie

【taglie:φ12、φ16、φ20、φ25】

Corpo principale fisso

Solo la parte della pinza ruota, quindi non si avranno problemi con i collegamenti attaccati al corpo.

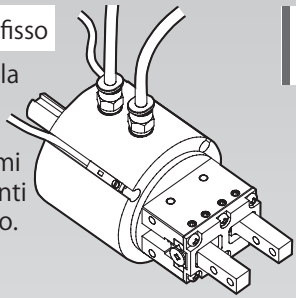

Unità esterna per ruotare la testa della pinza

Rotazione a 360° grazie al motore montato dietro al corpo pinza

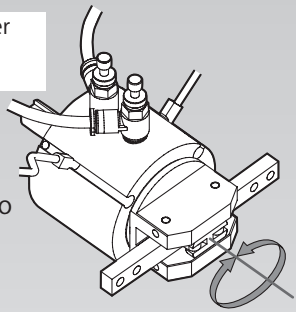

Pinza

P: testa parallela HP03E; O: testa radiale HV02E

Pinza parallela (P)

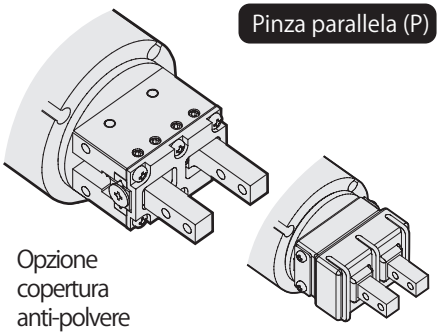

Opzione copertura anti-polvere

Radiale 180° (O)

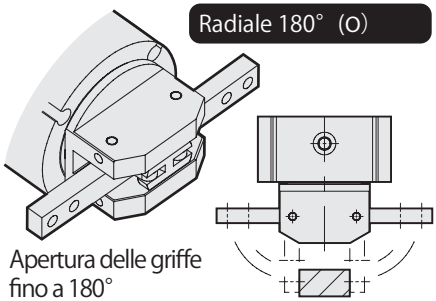

Apertura delle griffe fino a 180°

Esempio in funzione

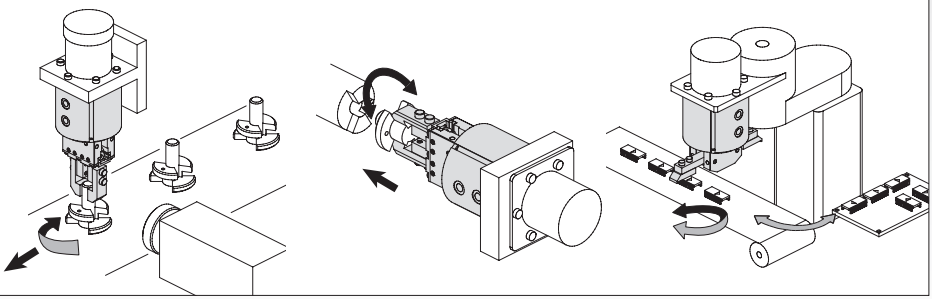

NEOKP, NEOKO SERIE

Descrizone

NEOK P – 12 C - JN – ZE235 A 2

SERIE

Tipologia
P：Pinza parallela
O：Pinza radiale 180°

Corsa
12：12 mm
16：16 mm
20：20 mm
25：25 mm

Funzione
C：Doppio effetto

Copertura anti-polvere
JN：NBR
JS：Silicone
JF：Viton (Fluoro)

Lunghezza cavo
A：1 [m]
B：3 [m]

Numero sensori
1：1
2：2

Sensore	No Code: no sensore
ZE135 2 Wire Solid State Switch, Straight Type	ZE235 2 Wire Solid State Switch, L-shaped
ZE155 3 Wire Solid State Switch, Straight Type	ZE255 3 Wire Solid State Switch, L-shaped

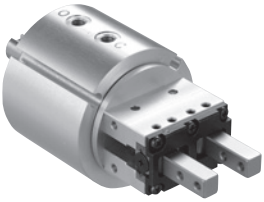

NEOKP

NEOKO

Copertura anti-polvere disponibile per pinza parallela (P)

JN – NEOK P 12

Protezione antipolvere
JN: With NBR Rubber Cover
JS: With Silicon Rubber Cover
JF: With Fluorine Rubber Cover

Serie

Diametro
8：φ 8
12：φ 12
16：φ 16
20：φ 20

Ricambistica

NEO K P – 12 C – SS/SET

SERIE

Tipologia
P：Pinza parallela
O：Pinza radiale 180°

Diametro
12：12mm
16：16mm
20：20mm
25：25mm

Operazione
C：Doppio effetto

Set guarnizioni

回転シール交換方法は P.577参照

仕様

	NEOKP-12C	NEOKP-16C	NEOKP-20C	NEOKP-25C
	Pinza			
Diametro [mm]	φ12	φ16	φ20	φ25
Corsa [mm]	4	8	12	14
Funzionamento	Aria compressa			
Pressione aria [MPa]	・No copertura 0.2〜0.7 ・Con copertura 0.25〜0.7	・No copertura 0.15〜0.7 ・Con copertura 0.25〜0.7	・No copertura 0.1〜0.7 ・Con copertura 0.15〜0.7	・No copertura 0.1〜0.7 ・Con copertura 0.15〜0.7
Resistenza [MPa]	1.05			
Cicli [cycle/min]	180			
Temperatura [℃]	0〜60			
Diametro connesioni	M5×0.8			
Forza [N]	Apertura：20 Chiusura：16	Apertura：34 Chiusura：25.5	Apertura：60.9 Chiusura：45.7	Apertura：87 Chiusura：67
Precisione [mm]	±0.01			
Inerzia [kg•m²]	3.5×10^{-6}	19×10^{-6}	53×10^{-6}	115×10^{-6}
	Parte girevole			
Coppia minima [N•m]	0.5	1.0	1.5	2.0
Giri [rpm]	120			
	Manutenzione regolare richiesta			
	Accessori			
Precisione [mm]	±0.15			
massa [g]	145 JN：＋6 JS：＋6 JF：＋7	370 JN：＋8 JS：＋8 JF：＋10	555 JN：＋12 JS：＋12 JF：＋16	770 JN：＋15 JS：＋15 JF：＋20

Punto di presa

Il punto di presa dell'oggetto L e la sporgenza coincidono con il limite del punto di presa. Se lo si eccede verrà applicata una forza eccessiva sulle guide causando danni e influenzando le prestazioni dell'articolo.

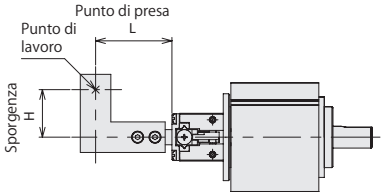

Descrizione

	NEOKO-12C	NEOK O-16C	NEOK O-20C	NEOK O-25C
	Pinza			
Metodo di apertura	C= doppio effetto			
Funzionamento	Aria compressa			
Diametro [mm]	φ12	φ16	φ20	φ25
Corsa [°]	−6～180			
Pressione [MPa]	0.2～0.7			
Resistenza [MPa]	1.05			
Cicli [cycle/min]	120			
Temperatura [℃]	0～60			
Diametro connessioni	M5×0.8			
Forza [N]	200/L	1100/L	2000/L	4580/L
Inerzia [kg•m ^{2}]	6×10^{-6}	27.5×10^{-6}	73×10^{-6}	194×10^{-6}
	Parte girevole			
Coppia [N•m]	0.5	1.0	1.5	2.0
Giri [rpm]	120			
	manutensione richiesta			
	Peso			
Massa [g]	140	345	510	745

Parti costituzionali

NEOKP-12C
NEOKP-16C

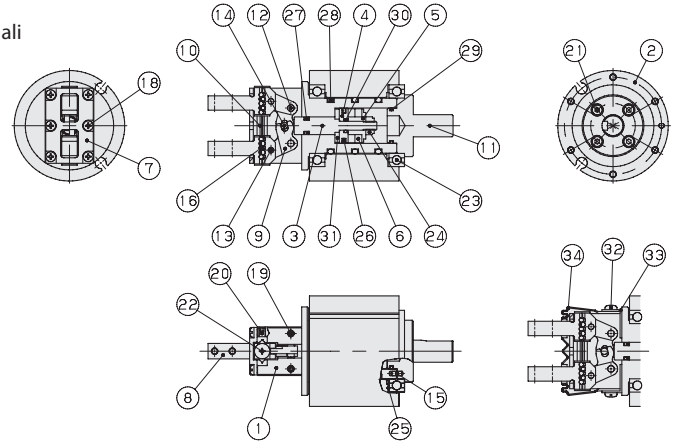

NEOKP-20C
NEOKP-25C

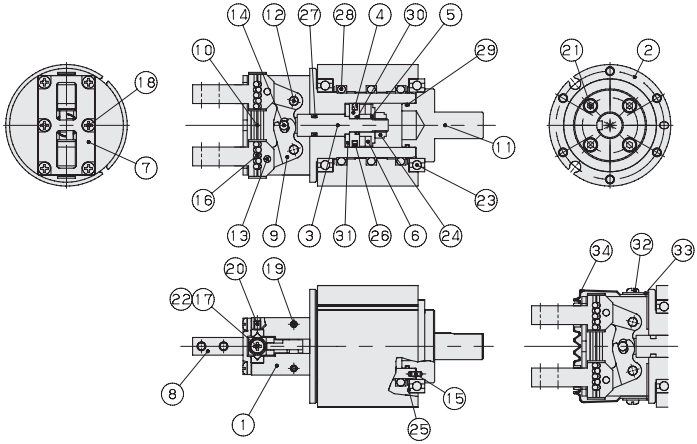

部品リスト

No.	Articolo	Materiale	No.	Articolo	materiale	No.	Articolo	Materiale
1	Corpo	Alluminio	13	Perno della leva	Acciaio	25	Supporto	Acciaio
2	Copertura esterna	Alluminio	14	Perno asta	Acciaio	26	Guarnizione pistone	NBR
3	Stelo del pistone	Acciaio	15	Perno di posizione	Acciaio	27	Involucro asta	NBR
4	Pistone	Acciaio	16	Cono	Acciaio	28	Testa rotante	NBR
5	Supporto magnetico	Alluminio	17	Rondella	Acciaio	29	O-ring	NBR
6	Magnete	Magnete	18	Vite testa bombata	Acciaio	30	O-ring	NBR
7	Copertura	Acciaio	19	Vite esagonale	Acciaio	31	Protezione	Urtetano
8	Leva	Acciaio	20	Vite esagonale	Acciaio	32	Vite testa bombata	Acciaio
9	Leva di azionamento	Carbonio	21	Bullone esagonale	Acciaio	33	Copertura	Acciaio
10	Cursore	Acciaio	22	Vite testa svasata	Acciaio	34	Protezione antipolvere	NBR
11	Tappo	Acciaio	23	Cuscinetto radiale	Acciaio			Fluoro
12	Perno di supporto	Acciaio	24	Pistone	Acciaio			Silicone

No.	Articolo	Materiale	No.	Osservazioni
28	Tenuta rotante	NBR	3	Grasso

Parti costituzionali

NEOKO-12C
NEOKO-16C

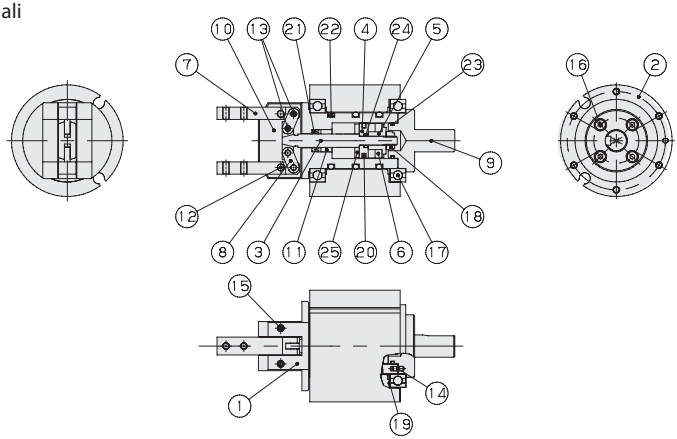

NEOKO-20C
NEOKO-25C

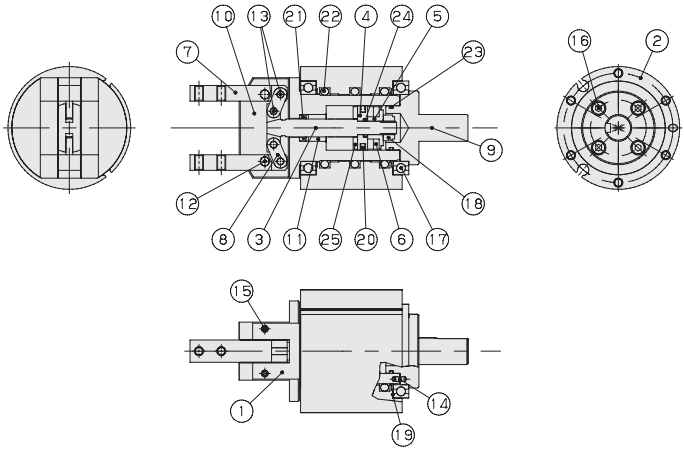

Descrizione

No.	Articolo	Materiale	No.	Articolo	Materiale	No.	Articolo	Materiale
1	Corpo	Alluminio	10	Piastra scorrevole	Acciaio	19	Collegamenti	Acciaio
2	Copertura esterna	Alluminio	11	Cuscinetto	Rame	20	Guarnizioni pistone	NBR
3	Stelo pistone	Acciaio	12	Perno supporto	Acciaio	21	Involucro asta	NBR
4	Pistone	Acciaio	13	Pin di collegamento	Acciaio	22	Tenuta rotante	NBR
5	Supporto magnete	Alluminio	14	Perno di posizione	Acciaio	23	O-ring	NBR
6	Magnete	Magnete	15	Vite esagonale	Acciaio	24	O-ring	NBR
7	Leva	Carbonio	16	Bullone esagonale	Acciaio	25	Protezione	Uretano
8	Connessione	Acciaio	17	Cuscinetto radiale	Acciaio			
9	Tappo	Acciaio	18	Asta pistone	Acciaio			

Set guarnizioni

No.	Articolo	Materiale	No.	Osservazioni
22	Guarnizioni	NBR	3	Grasso

Grafici forze in chiusura

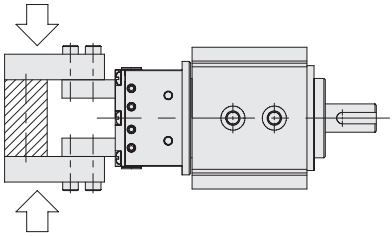

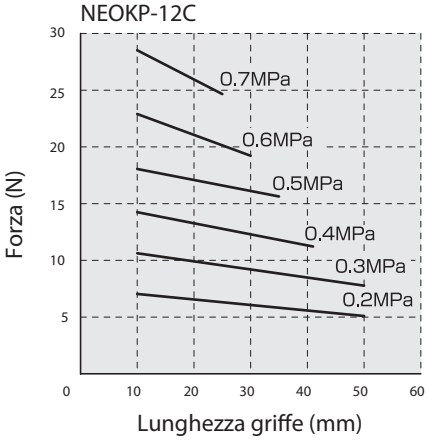

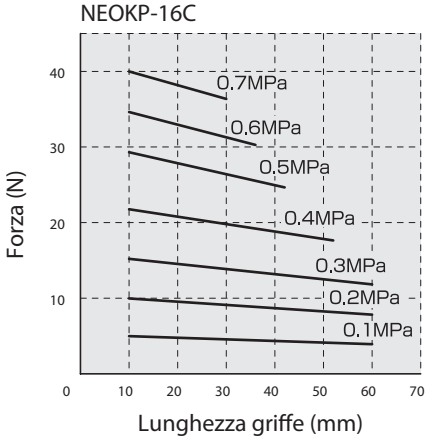

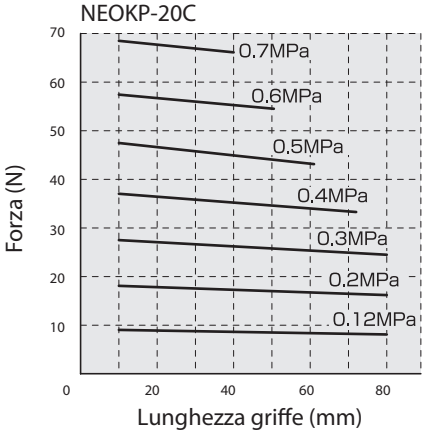

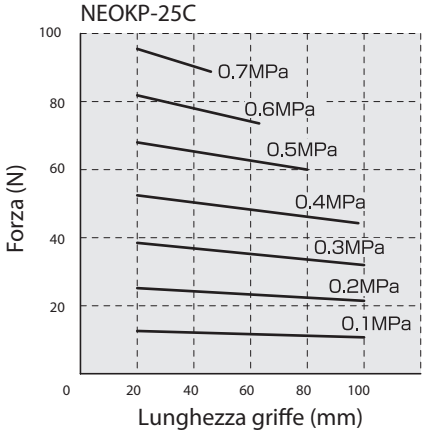

Grafici forze in apertura

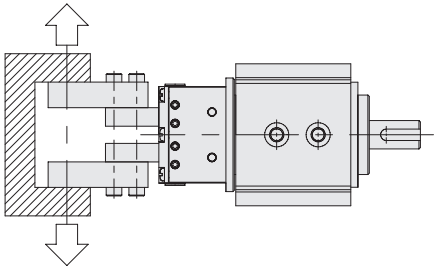

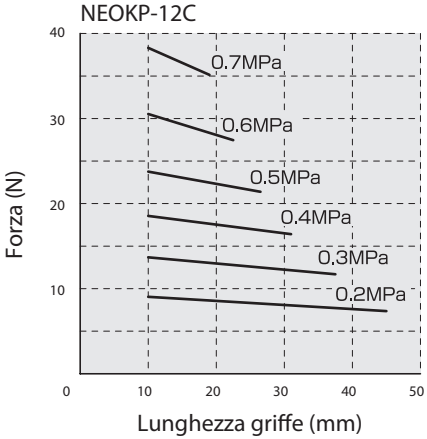

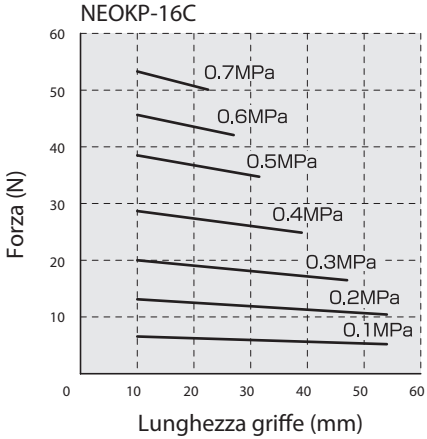

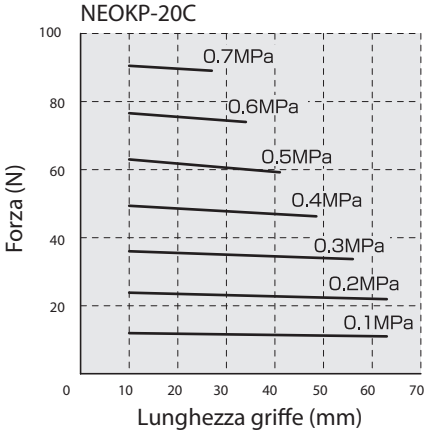

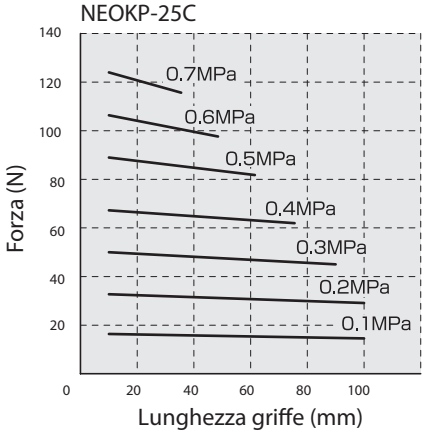

Limite del punto di presa in chiusura

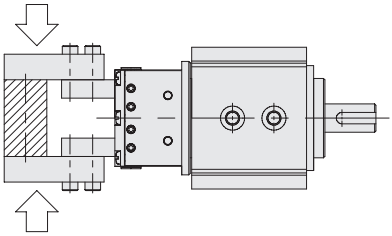

Progettare il punto di presa e l'energia di carico (momento di inerzia, tempo di oscillazione) entro i limiti qui indicati. In caso questi vengano superati verrà applicata una forza eccessiva sul meccanismo di apertura / chiusura, cosa che influerebbe sulle prestazioni e sulla durata della pinza

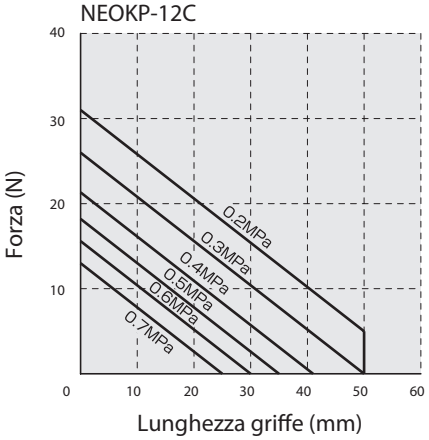

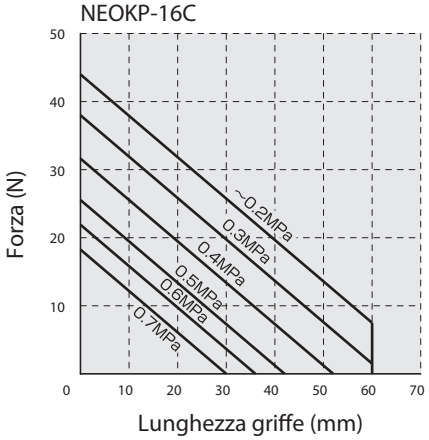

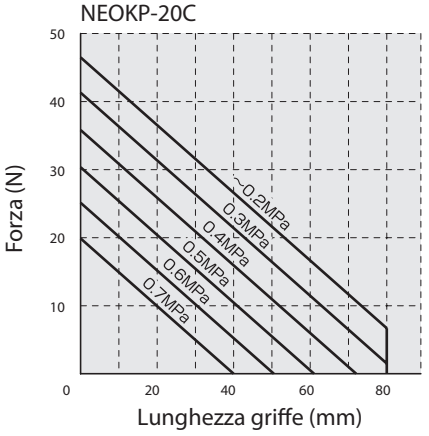

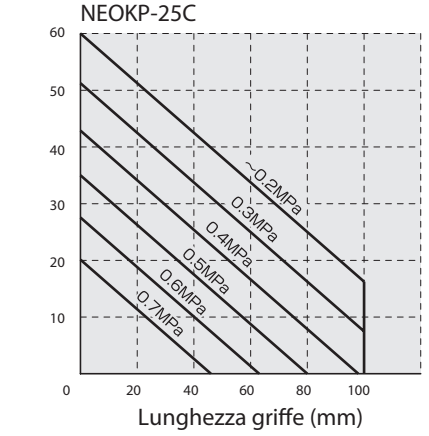

Limiti del punto di presa in apertura

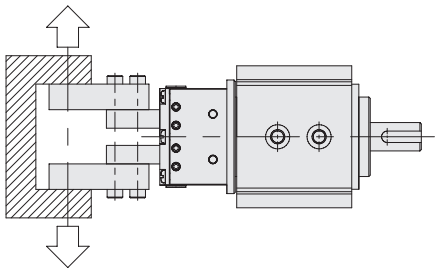

Progettare il punto di presa e l'energia di carico (momento di inerzia, tempo di oscillazione) entro i limiti qui indicati. In caso questi vengano superati verrà applicata una forza eccessiva sul meccanismo di apertura / chiusura, cosa che influerebbe sulle prestazioni e sulla durata della pinza

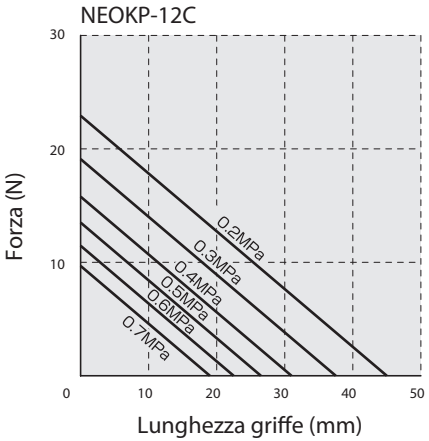

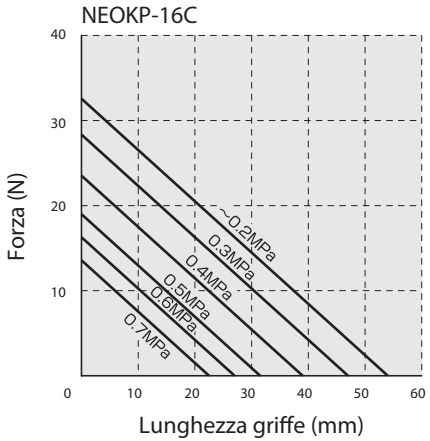

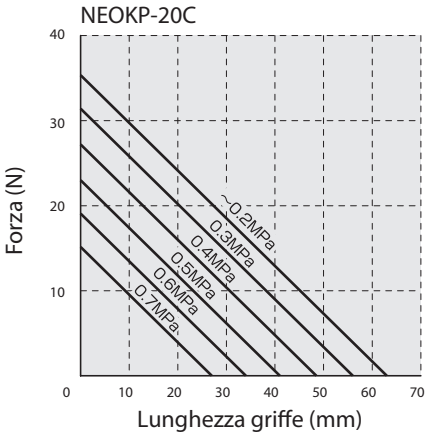

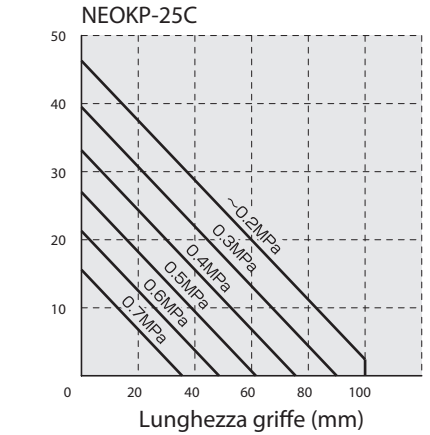

Limiti puno di presa in chiusura

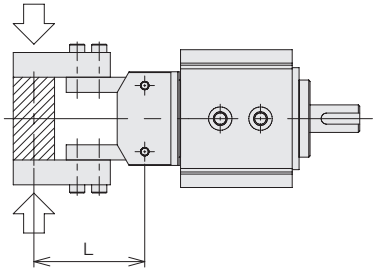

Progettare il punto di presa e l'energia di carico (momento di inerzia, tempo di oscillazione) entro i limiti qui indicati. In caso questi vengano superati verrà applicata una forza eccessiva sul meccanismo di apertura / chiusura, cosa che influerebbe sulle prestazioni e sulla durata della pinza

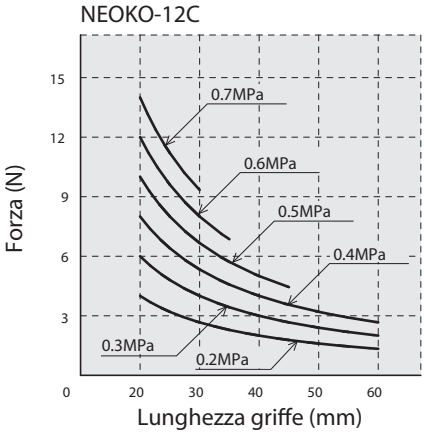

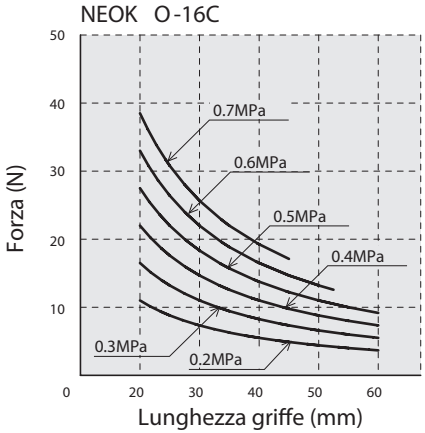

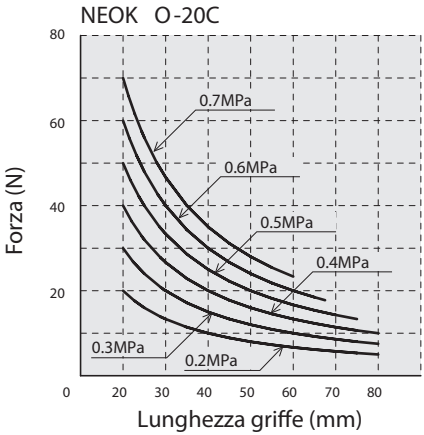

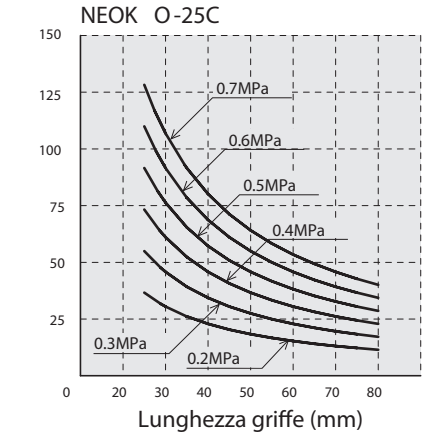

Limiti punto di presa in chiusura

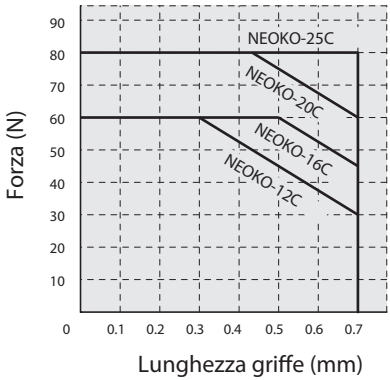

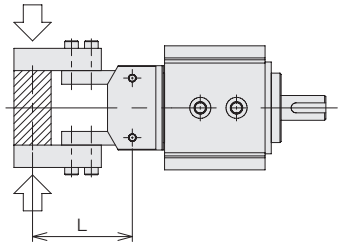

Progettare il punto di presa e l'energia di carico (momento di inerzia, tempo di oscillazione) entro i limiti qui indicati. In caso questi vengano superati verrà applicata una forza eccessiva sul meccanismo di apertura / chiusura, cosa che influerebbe sulle prestazioni e sulla durata della pinza

momento di inerzia e tempo di manovra

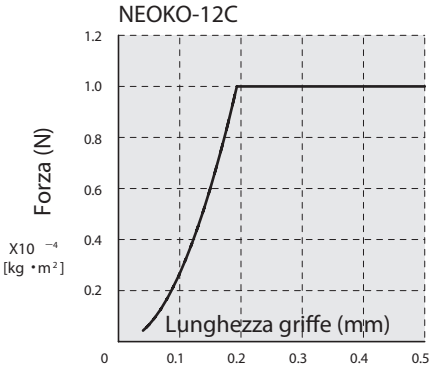

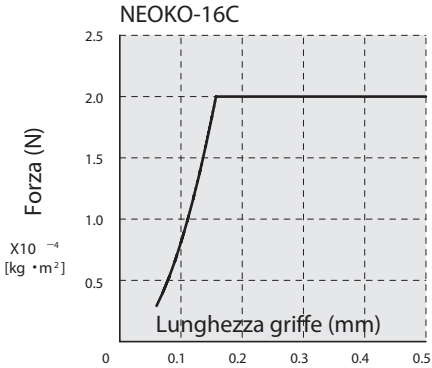

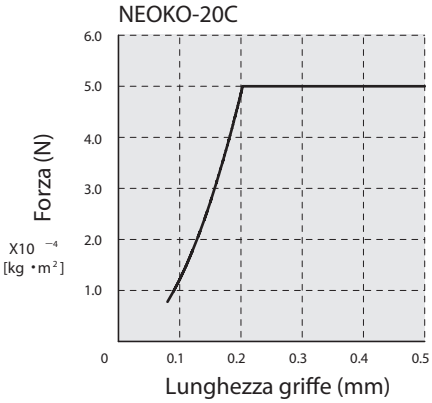

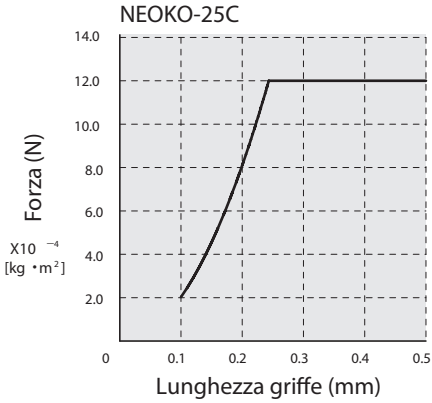

Metodo di montaggio del copro principale sull'applicazione

Montaggio

Utilizzo delle viti di montaggio sulla parte inferiore dell'unità principale

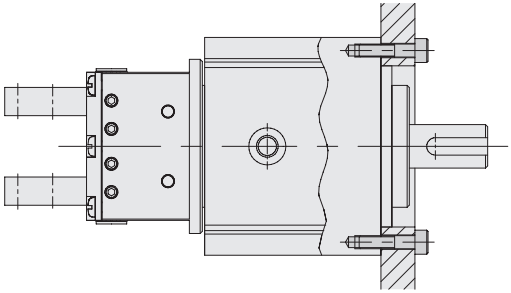

Articolo	Tipologia viti	Coppia di serraggio viti ［N・m］
NEOKP-12、NEOKO-12	M3×0.5	0.59
NEOKP-16、NEOKO-16	M3×0.5	0.59
NEOKP-20、NEOKO-20	M4×0.7	1.37
NEOKP-25、NEOKO-25	M4×0.7	1.37

Posizionamento durante il monaggio del corpo principale

Per posizionare il corpo principale durante il montaggio
utilizzare la borchia di centraggio fornita sulla superficie
di assmblaggio、

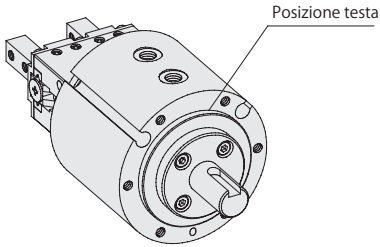

Articolo	Posizione testa
NEOKP-12、NEOKO-12	$\varphi 26\ ^{0}_{-0.01}$ $h\ 2.5\ ^{+0.5}_{0}$
NEOKP-16、NEOKO-16	$\varphi 37\ ^{0}_{-0.01}$ $h\ 2.5\ ^{+0.5}_{0}$
NEOKP-20、NEOKO-20	$\varphi 42\ ^{0}_{-0.01}$ $h\ 3\ ^{+0.5}_{0}$
NEOKP-25、NEOKO-25	$\varphi 47\ ^{0}_{-0.01}$ $h\ 3\ ^{+0.5}_{0}$

Metodo montaggio griffe

Durante l'assemblaggio delle griffe sui supporti
è consigliato di tenere la griffa con una chiave come
indicato in figura

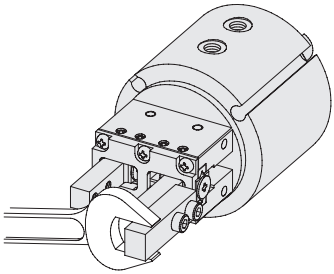

Articolo	Tipo di vite	Coppia di avvitamento ［N・m］
NEOKP-12、NEOKO-12	M3×0.5	1.14
NEOKP-16、NEOKO-16	M3×0.5	1.14
NEOKP-20、NEOKO-20	M4×0.7	2.7
NEOKP-25、NEOKO-25	M5×0.8	5.4

Massa delle griffe da montare

Si consiglia di rendere l'accessorio montato sul supporto griffa il più leggero possibile.
Fare attenzione a non superare le masse indicate di seguito.
L'applicazione di un carico elevato sulla leva può provocare la rottura dei meccanismi interni.

機　種	質　量［g］
NEOKP-12	10
NEOKP-16	50
NEOKP-20	100
NEOKP-25	150

Posizione montaggio sensori

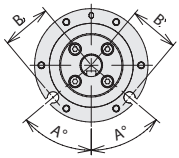

[mm]

Taglia	φ12	φ16	φ20	φ25
A	25	50	50	50
B	15.8	22	24.5	27

Posizione

I sensori seguonno il movimento delle griffe per verificarne costantemente la posizione

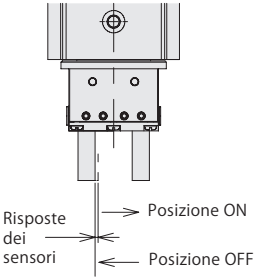

Direzione

Qui indicate le posizioni massime raggiungibili dai senori. Si consiglia di utilizzare il seguente disegno come esempio

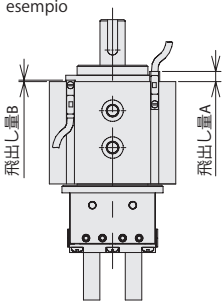

Montaggio sensori

Inserire il sensore nel suo supporto dedicato. Una volta inserito posizionare il tutto sul corpo pinza e avvitare le viti con un avvitatore preciso. Coppia circa 0,1 Nm

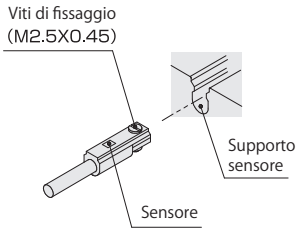

Articolo			φ12	φ16	φ20	φ25
NEOKP	Tolleranza Max	[mm]	0.3	0.3	0.4	0.4
	Qtà A・B	[mm]	0	0	0	0
NEOKO	Tolleranza Max	[°]	2	1.5	1.5	1
	Qtà A	[mm]	4	3	2	2
	Qtà B	[mm]	1	0	0	0

Correzione posizione dei sensori

In chiusura

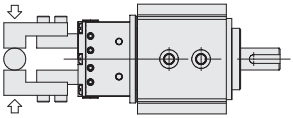

①Controllare che il pezzo sia serrato tra le griffe

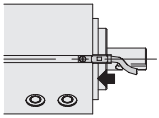

②Inserire il sensore nell'apposito spazio in direzione della freccia

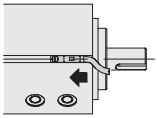

③La luce LED del sensore si illumina una volta inserito

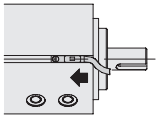

④③Il sensore viene inserito e ha un gioco di 0,6 mm

In apertura

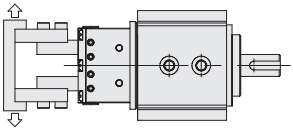

①Controllare che il pezzo sia serrato tra le griffe

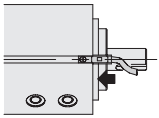

②Inserire il sensore nell'apposito spazio in direzione della freccia

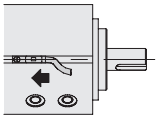

③La luce LED del sensore si illumina una volta inserito

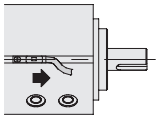

④③Il sensore viene inserito e ha un gioco di 0,6 mm

Smontaggio

Il giunto girevole può esse smontato dopo la rimozione del bullone a testa esagonale. Durante lo smontaggio bisogna fare attenzione a non perdere la parte interna della pinza (spessore). Durante il montaggio bisogna fare attenzione a riposizionare lo spessore nella medesima posizione altrimenti si rischaino errori di funzionamento. Una volta effettuato il montaggio applicare adesivo anaerobico al bullone a testa esagonale.

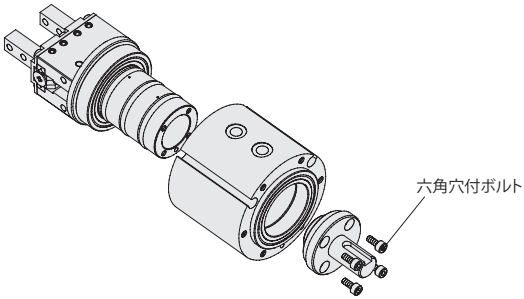

Lubrificazione

Il giunto girevole è lubrificato, ma la velocità di rotazione e le condizioni di utilizzo (ambiente) necessitano di far riempire dall'utente di lubrificante il modulo. Il odulo rotante garantisce un funzionamento di circa 2 mln di rotazioni. Il lubrificante va inserito nell'apposita custodia della guarnizione rotante, si consiglia di utilizzare olio ISO VG32.

NEOKP −12C, 16C
NEOKO −12C, 16C

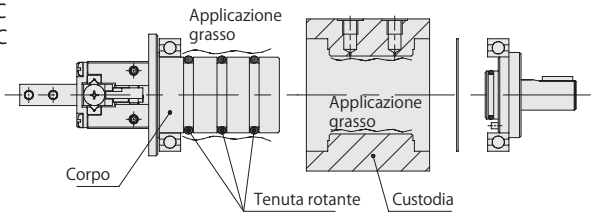

NEOKP −20C, 20C
NEOKO −25C, 25C

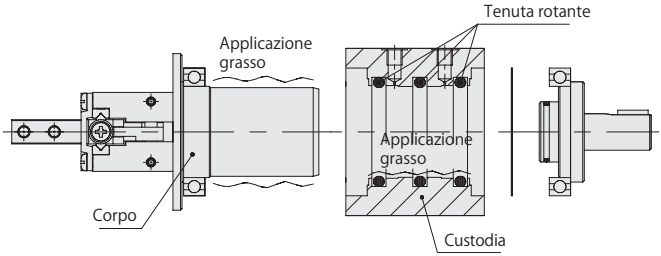

NEOKP −12C

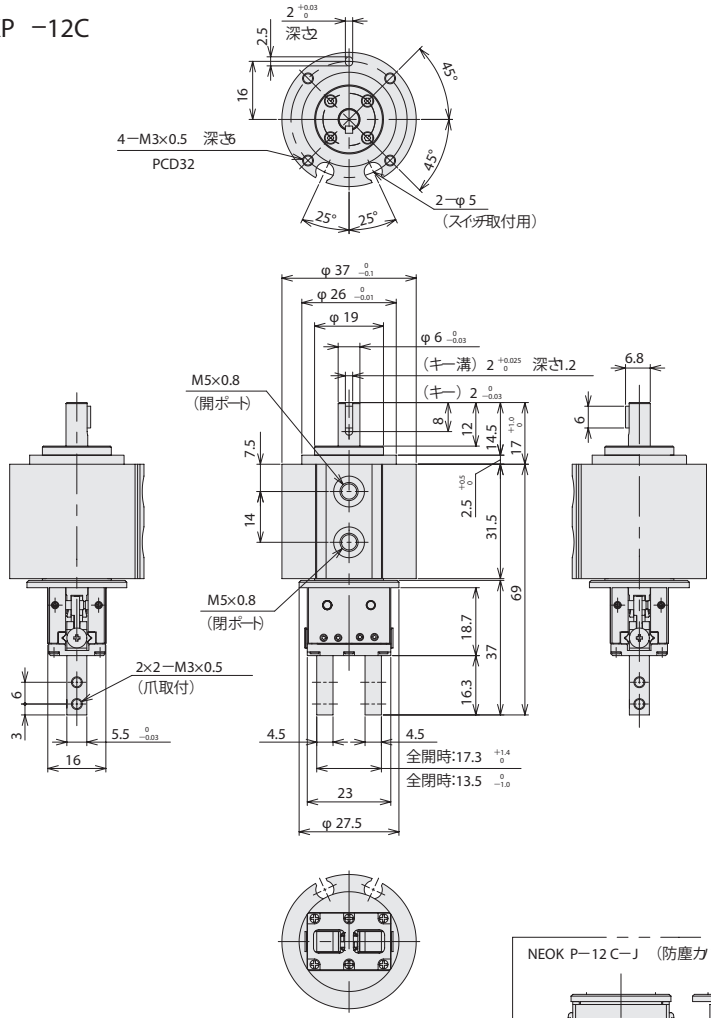
2 +0.03 0
2.5
深さ
16
45°
4−M3×0.5 深さ6
PCD32
45°
2−φ5
(スイッチ取付用)
25°
25°
φ37 0 −0.1
φ26 0 −0.01
φ19
φ6 0 −0.03
(キー溝) 2 +0.025 0 深さ1.2
6.8
M5×0.8
(開ポート)
(キー) 2 0 −0.03
8
12
14.5
17 +1.0 0
6
7.5
+0.1 0
2.5
31.5
14
69
M5×0.8
(閉ポート)
18.7
37
16.3
2×2−M3×0.5
(爪取付)
6
3
5.5 0 −0.03
16
4.5
4.5
全開時:17.3 +1.4 0
全閉時:13.5 0 −1.0
23
φ27.5
NEOK P−12 C−J (防塵カバー付)
(22)
(13)
(20)
(27)

NEOKP −16C

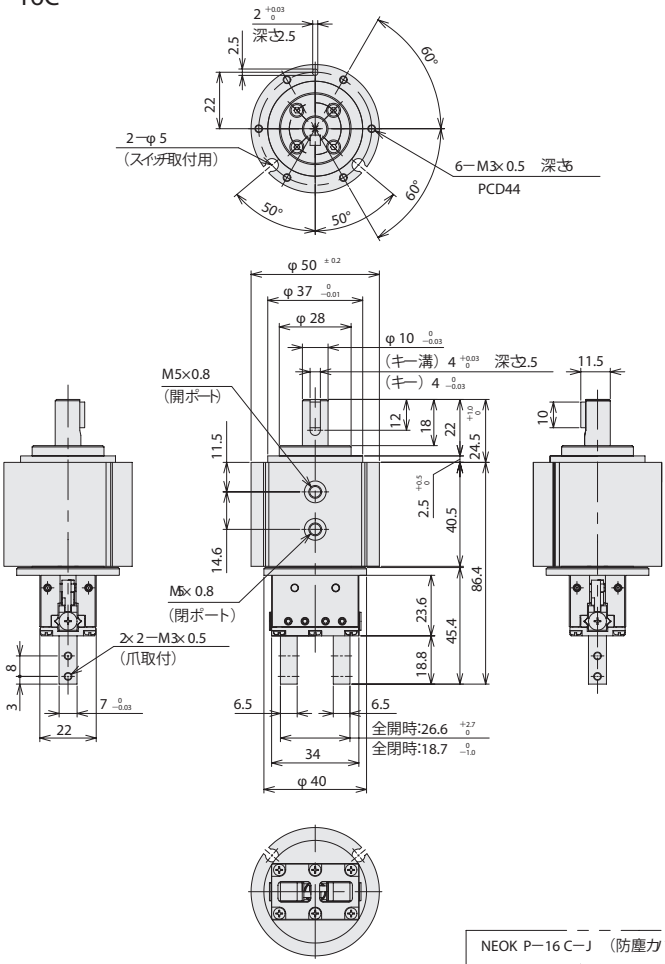
2 +0.03 0
深さ2.5
2.5
22
60°
2−φ5
（スイッチ取付用）
6−M3×0.5 深さ6
PCD44
50°
60°
50°
φ50 ±0.2
φ37 0 −0.01
φ28
φ10 0 −0.03
（キー溝）4 +0.03 0 深さ2.5
（キー）4 0 −0.03
11.5
M5×0.8
（開ポート）
12
18
22
+1.0 0
10
11.5
24.5
2.5 +0.5 0
40.5
14.6
86.4
M5×0.8
（閉ポート）
23.6
45.4
2×2−M3×0.5
（爪取付）
18.8
8
3
7 0 −0.03
22
6.5
6.5
全開時:26.6 +2.7 0
全閉時:18.7 0 −1.0
34
φ40

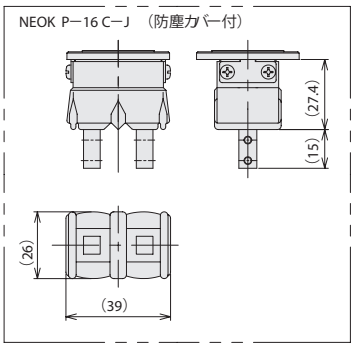
NEOK P−16 C−J （防塵カバー付）
(27.4)
(15)
(26)
(39)

NEOKP　−20C

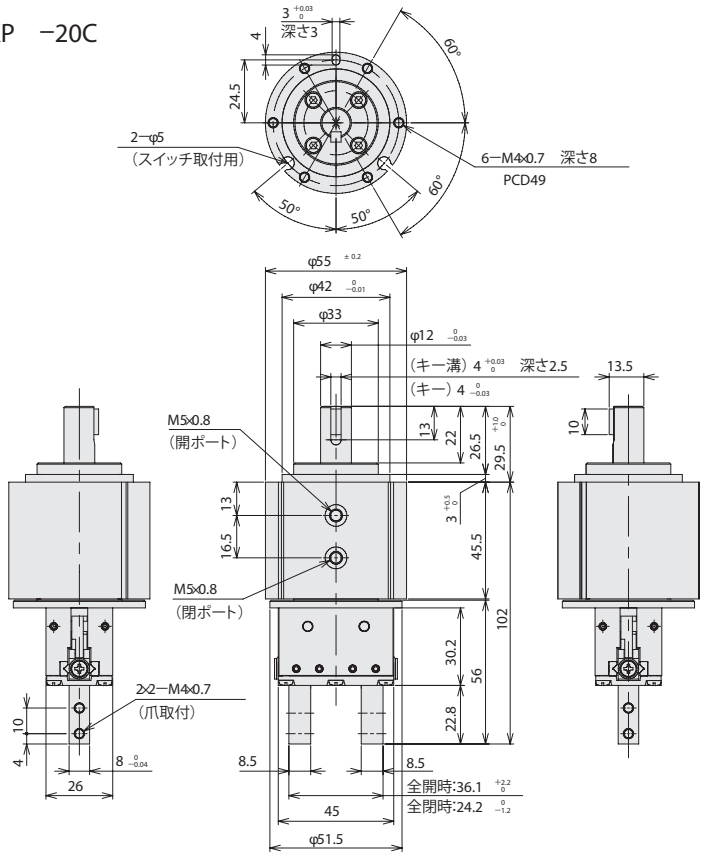
3 +0.03 0
深さ3
4
24.5
60°
2−φ5
（スイッチ取付用）
6−M4×0.7　深さ8
PCD49
50°
50°
60°
φ55 ±0.2
φ42 0 −0.01
φ33
φ12 0 −0.03
（キー溝）4 +0.03 0　深さ2.5
（キー）4 0 −0.03
13.5
M5×0.8
（開ポート）
13
22
26.5
29.5
10
+1.0 0
13
16.5
3 +0.5 0
45.5
M5×0.8
（閉ポート）
102
30.2
56
22.8
2×2−M4×0.7
（爪取付）
10
4
8 0 −0.04
26
8.5
8.5
全開時:36.1 +2.2 0
全閉時:24.2 0 −1.2
45
φ51.5

注記

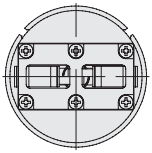

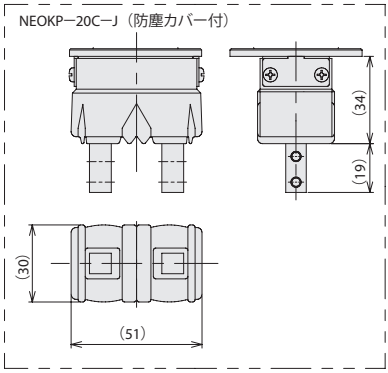
NEOKP−20C−J（防塵カバー付）
(34)
(19)
(30)
(51)

NEOKP −25C

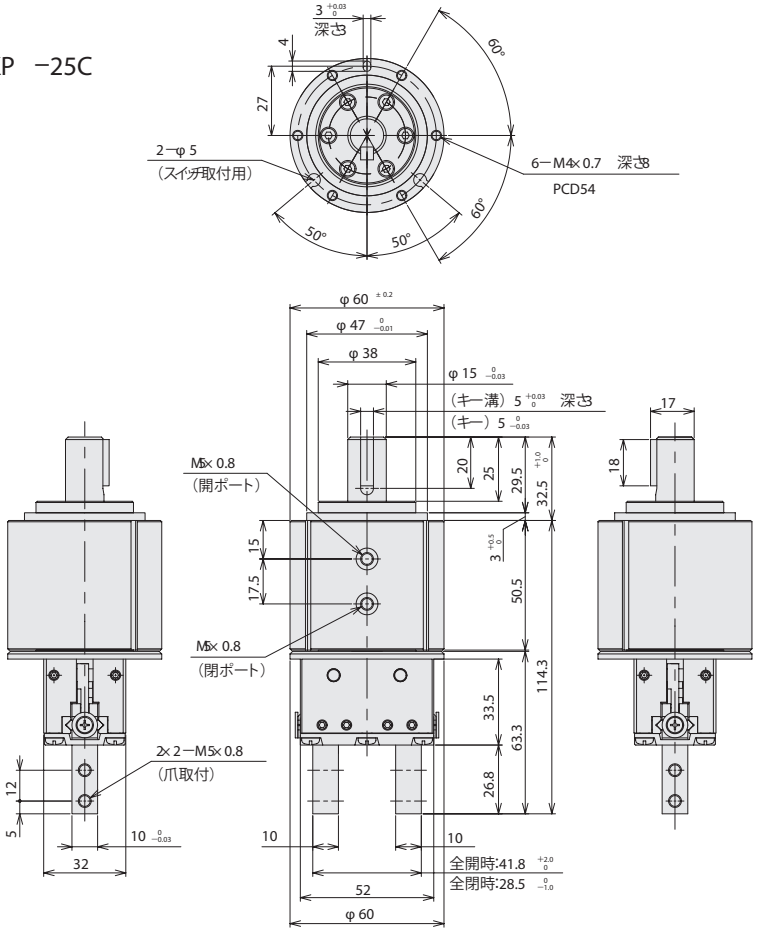
3 +0.03 0
深さ
4
27
60°
2−φ 5
（スイッチ取付用）
6−M4× 0.7 深さ8
PCD54
50°
50°
60°
φ 60 ± 0.2
φ 47 0 −0.01
φ 38
φ 15 0 −0.03
（キー溝）5 +0.03 0 深さ3
（キー）5 0 −0.03
17
M5× 0.8
（開ポート）
20
25
29.5
32.5
+1.0 0
18
15
17.5
3 +0.5 0
50.5
M5× 0.8
（閉ポート）
114.3
33.5
63.3
26.8
2× 2−M5× 0.8
（爪取付）
12
5
10 0 −0.03
32
10
10
全開時:41.8 +2.0 0
全閉時:28.5 0 −1.0
52
φ 60

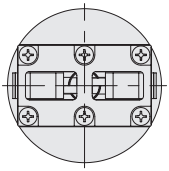

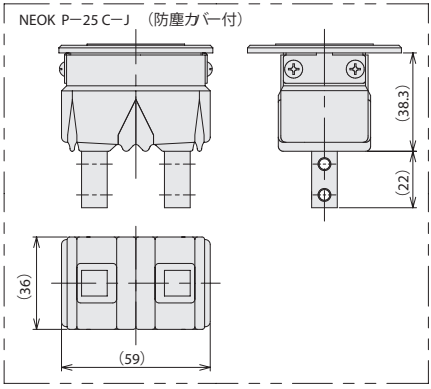
NEOK P−25 C−J （防塵カバー付）
(38.3)
(22)
(36)
(59)

NEOKO　−12C

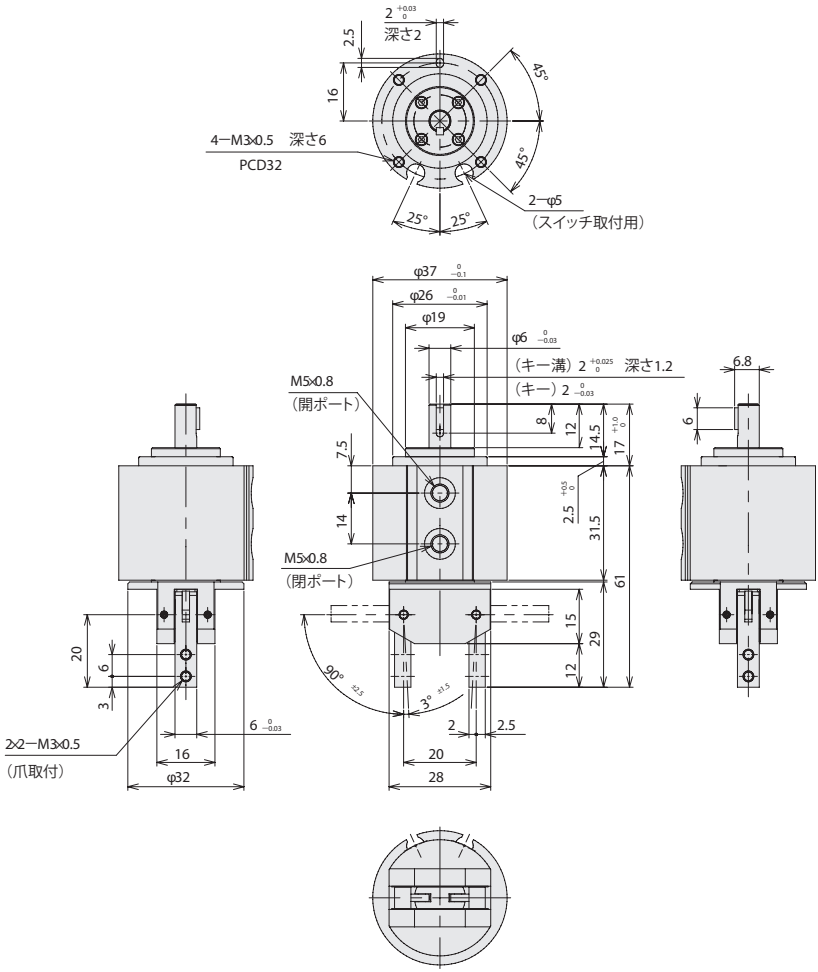
2 +0.03 0
深さ2
2.5
16
45°
45°
4−M3×0.5　深さ6
PCD32
2−φ5
（スイッチ取付用）
25°
25°
φ37 0 −0.1
φ26 0 −0.01
φ19
φ6 0 −0.03
（キー溝）2 +0.025 0　深さ1.2
（キー）2 0 −0.03
6.8
M5×0.8
（開ポート）
8
12
14.5
17 +1.0 0
6
7.5
14
2.5 +0.5 0
31.5
M5×0.8
（閉ポート）
61
15
29
12
20
6
3
90° ±2.5
3° ±1.5
2
2.5
6 0 −0.03
2×2−M3×0.5
（爪取付）
16
φ32
20
28

NEOKO　−16C

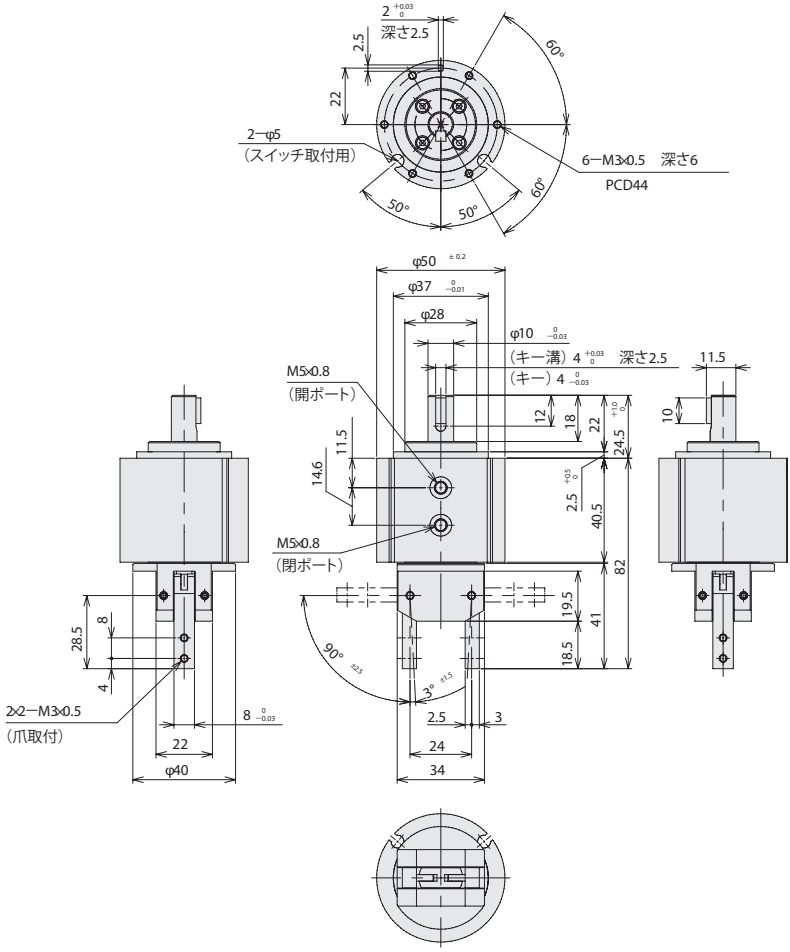
2 +0.03 0
深さ2.5
2.5
22
60°
2−φ5
（スイッチ取付用）
6−M3×0.5　深さ6
PCD44
50°
50°
60°
φ50 ±0.2
φ37 0 −0.01
φ28
φ10 0 −0.03
（キー溝）4 +0.03 0　深さ2.5
（キー）4 0 −0.03
11.5
M5×0.8
（開ポート）
12
18
22
+1.0 0
24.5
10
11.5
14.6
+0.5 0
2.5
40.5
82
M5×0.8
（閉ポート）
19.5
41
18.5
28.5
8
4
90° ±2.5
3° ±1.5
2×2−M3×0.5
（爪取付）
8 0 −0.03
2.5
3
22
24
φ40
34

NEOKO −20C

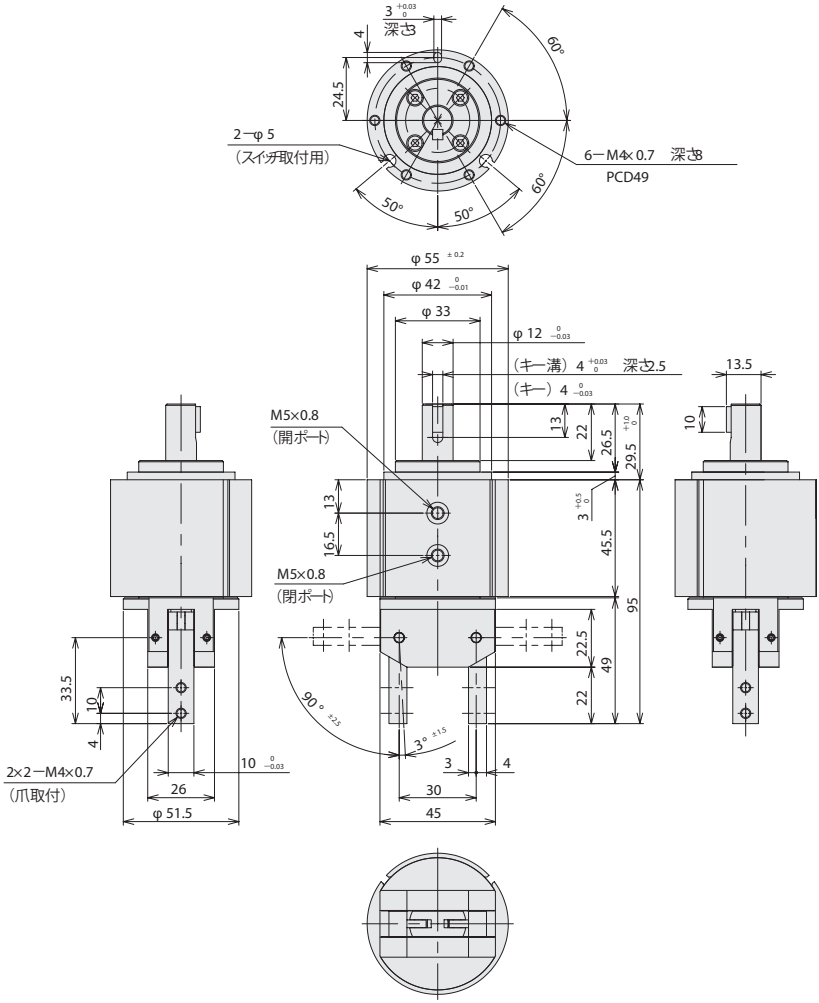
3 +0.03 0
深さ
4
24.5
60°
2−φ 5
（スイッチ取付用）
6−M4× 0.7 深さ8
PCD49
50°
50°
60°
φ 55 ± 0.2
φ 42 0 −0.01
φ 33
φ 12 0 −0.03
（キー溝）4 +0.03 0 深さ2.5
（キー）4 0 −0.03
13.5
M5×0.8
（開ポート）
13
22
26.5
29.5
10
+1.0 0
13
16.5
3 +0.5 0
45.5
M5×0.8
（閉ポート）
95
22.5
49
22
33.5
10
4
90° ±2.5
3° ±1.5
2×2−M4×0.7
（爪取付）
10 0 −0.03
26
φ 51.5
3
4
30
45

NEOKO　−25C

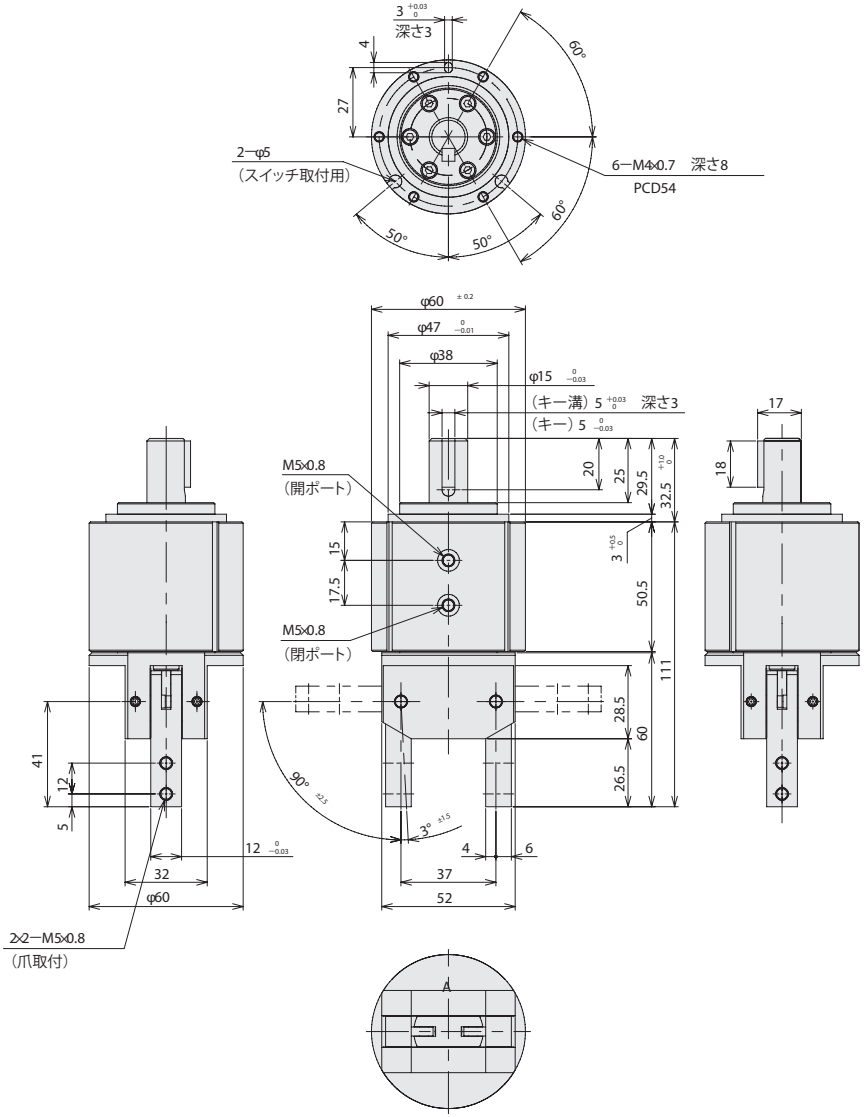
3 +0.03 0
深さ3
4
27
60°
2−φ5
（スイッチ取付用）
6−M4×0.7　深さ8
PCD54
60°
50°
50°
φ60 ±0.2
φ47 0 −0.01
φ38
φ15 0 −0.03
（キー溝）5 +0.03 0　深さ3
（キー）5 0 −0.03
17
M5×0.8
（閉ポート）
20
25
29.5
32.5
+1.0 0
18
3 +0.5 0
15
17.5
50.5
M5×0.8
（閉ポート）
111
28.5
60
26.5
41
12
5
90° ±2.5
3° ±1.5
12 0 −0.03
4
6
32
37
52
φ60
2×2−M5×0.8
（爪取付）
A

Gripper Selection Guide

Precautions for Selection

(1) Safety Measures

If the movable parts of the workpiece and gripper may cause damage to the human body or mechanical equipment during operation, take safety measures such as installing a protective cover.
In addition, if using a pneumatic gripper, see also the common precautions of pneumatic equipment.

(2) Gripping Force and Workpiece Mass

The gripping force varies depending on action type (single acting type or double acting type) and working pressure.It also relates to the material, shape, surface roughness and movement speed, etc. of the workpiece to be gripped. As a general guide, select a gripper that has a gripping force of 10 to 20 times or more the workpiece weight.
In addition, it shall be greater than that when great acceleration or impact is applied during workpiece conveyance.
Selection of an unsuitable model may cause workpiece falling, etc.

(3) Gripping Point Limit Range

When gripping a workpiece, mount the attachment to the finger part according to the workpiece while keeping the distances from the gripper body (gripping point L and overhang H) within the limit range.
If they exceed the limit range, the bending moment applied to the finger part will become large, causing backlash and a bad influence on the life and accuracy.

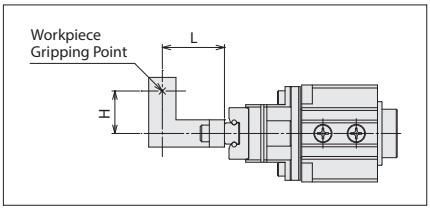

(4) Attachment Design

The attachment shall be designed to be as light and short as possible.If the attachment is long and heavy, the bending moment applied to the finger part and the inertial force at the time of gripping will become too large, causing increased backlash or damage.

(5) Opening/Closing Stroke

Select a model that has a margin in gripper opening/closing and stroke relative to workpiece.If there is no margin, gripping may become unstable due to the variation of gripper opening/closing width and workpiece diameter.
When a detection switch is used, it may cause detection failures.

(6) Mounting

When mounting the attachment to the finger part, do not twist the finger part.Twisting may cause backlash or reduced accuracy.
Also, adjust and check so that no external force is applied when opening/closing the finger part.When moving the gripper or opening/closing the finger part, collision of the workpiece or attachment with other objects may cause backlash or damage.When mounting the gripper body, prevent scratches or dents due to the gripper falling or collision.

(7) Opening/Closing Speed

If the opening/closing speed of the finger part is too high, the inertia of the finger part and attachment may cause backlash or damage.
Install a speed control valve to prevent impact.

Actuator Precaution ①

Please read the following instructions before use.

Design

⚠ WARNING

◆ Abnormal action

Actuators may cause a kind of impact when force change occurs due to rattle in the sliding part of a machine.In this case, actuators may result in bodily damage (e.g. hands or legs being caught) or machine damage. Therefore, adjust actuators for smooth mechanical movement and design them to prevent bodily damage.

◆ Protective cover

When there is a risk that a system or a product is harmful to human body during operation, install a protective cover.

◆ Impact relaxation

When the driven object moves at a high speed or its mass is large, it is difficult to absorb impact using the cushion of the cylinder only. Therefore, install a circuit to reduce the speed before going to the cushion to release impact. In this case, consider the rigidity of the mechanical system fully.

◆ Power source failures and supply pressure drop

If the power source (e.g. electric, pneumatic pressure, hydraulic source) has a failure or the air pressure drops due to troubles, cylinder power will drop, thus leading to load decrease. Take measures to prevent damage to human bodies and equipment.

◆ Jumping prevention circuit

When the cylinder is driven by the exhaust center type directional control valve or one side of the piston is pressed under the condition that air has been exhausted from the cylinder (such as when starting after the residual pressure has been exhausted from the circuit), driven objects will jump out at a high speed. Such situation may be harmful to the human body (e.g. hands or legs getting caught) or machine damage. Therefore, select equipment and design circuits to prevent driven objects from jumping.

◆Emergency stop, abnormal stop

Design actuators so that their motions do not damage human bodies or equipment even in case of emergency/ abnormal stop of the system or when the system is re-started after stop.

Selection

⚠ WARNING

◆ Working pressure range

If the system is used with the maximum working pressure or above, each part will be worn or damaged, thus resulting in breakage or operation failures. If the system is used with the minimum working pressure or less, the specified thrust force cannot be generated, thus causing malfunctions such as failure to move smoothly. Therefore, use products within the specified working pressure range. (See the specifications.)

◆ Intermediate stop

When the 3-position closed center type directional control valve is used to stop the cylinder piston in the intermediate position, it cannot stop it correctly and accurately because it uses not hydraulic pressure but compressed air. Also, it is not assured that valves and cylinders leak no air. Therefore, pistons may not be able to stop for a long time. Consult us if you need to realize long time stop position retention.

Mounting

⚠ WARNING

◆ Locking in mounting

Product fixing bolts and attachment/jig mounting bolts must have a locking. Mount bases must have a structure to prevent deformation and breakage due to thrust force or inertia force at stopping.

⚠ CAUTION

◆ Precautions in operating

Do not use the product until it is confirmed that equipment operate properly.
After mounting, repair or modification, connect compressed air and power and conduct appropriate functional tests and leak inspection to check if the mounting is appropriate.

◆ Equipment operation check

After mounting the product to the system, do not start the system immediately but check if the product has been properly mounted for safety.

◆ Product handling

Dropping or hitting the product or pinching the product with a tool will result in product deformation, thus causing accuracy deterioration and operational failure.

◆ Speed adjustment

Adjust the cylinder drive speed gradually to the specified speed with a speed controller from the low speed side.

◆ Precautions in magnetic products

Bringing magnetic products such as a magnetic disk, a magnetic guard and a magnetic tape close to the built-in switch sensing magnet type may result in data erase. Also, do not bring them close to any equipment that may cause malfunction due to magnetism.

Actuator Precaution ②

Please read the following instructions before use.

Piping

CAUTION

◆ Seal tape winding

When you screw in pipes and joints, be careful not to make piping screw chips and sealing materials enter into the inside of the pipes. When you use a seal tape, wind a screw with the tape so that 1.5 to 2 turns of the screw head is not winded.

Lubricating

CAUTION

◆ Use in the lubrication circuit

If the system needs lubricating, use additive-free turbine oil class 1 ISO VG32 or ISO VG46. Do not use machine oil and spindle oil because they will damage packings, thus causing operation failures. Do not stop lubricating in the middle of lubricating because doing so will cause flowout of lubrication grease, thus accelerating damage of packings and other parts, resulting in operation failures.

Air source

CAUTION

◆ Quality of compressed air

Compressed air containing drain (e.g. dust, water, salt, degraded compressor oil, oil carbon particles) and corrosive gas will damage packings and other parts, thus causing operation failures and damages. Therefore, use clean compressed air.

◆ Drain removal measure

Compressed air containing a large amount of drain not only causes operation failures of the air compressor but also causes environmental contamination. Install equipment such as an after-cooler, an air dryer and an air filter (nominal filtration rating: 50 μm or less).

The air cleaning system to drive actuators is recommended in JPAS005 "Guidelines for Use and Selection of Pneumatic Cylinders".

◆ Temperature of compressed air

Hot compressed air will accelerate damage of packings and other parts. Even when the environmental temperature is within the specified range, heat may transmit through jigs connected to the actuator and driven objects. When the environmental temperature is low, drain and moisture will become solidified or frozen, thus resulting in damaged packings and parts and operation failures. Therefore, measures to prevent freezing must be taken.

Usage environment

WARNING

◆ Outdoor use

Do not use the product in places where the product is directly or indirectly exposed to wind and rain, is exposed to direct sunlight, or any outdoor place where the product is influenced by temperature or any other factors because this product is not resistant to weather.

◆ Use in the corrosive environment

Do not use the product in water or places where the product is exposed to salt water, acid, alkaline fluid splash, iron powder or in their gases or moisture vapors.

◆ Cover installation

Attachment of dust, water, oil, chips, iron powder, or spatter to the rod and the sliding parts will result in damaged shafts and packings, thus causing air leak and operation failures. Install a cover to prevent them from attaching.

◆ Operating temperature range

Use with a temperature exceeding the maximum operating temperature will result in deterioration acceleration such as hardening of packings, thus causing operation failures. Even when the environmental temperature is within the specified range, heat may transmit through jigs and driven objects. When the product is working at a high speed, its sliding surfaces will locally overheat, thus causing similar problems, freezing due to adiabatic expansion or surface dew condensation.

When the temperature is lower than the minimum operating temperature, drain and moisture will become solidified or frozen, thus resulting in damaged packings and operation failures. Therefore, measures to prevent freezing must be taken.

Maintenance and check

WARNING

◆ Removing equipment, and supplying and exhausting compressed air

Before removing equipment, make sure that driven object fall prevention measures and runaway prevention measures have been taken, cut off supply air, turn off the power of the equipment and exhaust compressed air from the system.

Before re-starting the equipment, make sure that the jumping prevention measures have been taken and do it carefully.

CAUTION

◆ Draining air filter

Operating the equipment without maintaining or draining the air dryer and the air filter will result in life shortening or equipment failures. Drain tends to increase in summer in particular, so drain them frequently in summer. Use of a type with an auto drain function is recommended.

Switch Precaution ①

Please read the following instructions before use.

Design and selection

WARNING

◆ Specification check

Please read the specifications carefully because use of a load current, voltage, temperature or impact outside of the specified range will result in equipment breakage or operation failures.

◆ Contact protection circuit (measure against surge voltage)

When an induction load such as a relay or a solenoid is connected, surge voltage is generated. In this case, therefore, install a contact protection circuit.
See "Switch Connection Method" for details.

◆ Actuator installation interval

Switches are operated by a magnet built in the actuator. Therefore, if two products get close to each other, their magnets may interfere with each other, thus causing malfunction.

◆ Leak Current

<Solid State>
For the 2 wire system solid state auto switch, currents (leak currents) flow to the load to activate the internal circuit even when they are OFF.
When the leak current is lower than the load operation current (input off current of the controller), restoration failure occurs (ON state remains). If such switch cannot meet the specification, use a 3 wire system switch. When switches (n switches) are connected in parallel, the magnitude of the current flown to the load will be n times.

◆ Serial connection

When switches with an indicator are connected in series, voltage drop occurs due to the internal resistance of light-emitting diodes, etc. (When n switches are connected, the voltage drop is n times.)
In this case, the load may not operate even when the switches are normally operated.

◆ Switch wiring length

When the switch wiring is long, excessive current flows into the contact due to the incoming current when the switch is turned ON. Thus, the switch may remain ON. When the wire length is longer than 10 m, install a cable surge absorbing circuit. See "Switch Connection Method" for details.

◆ Detection in the middle of a stroke

Note that when a switch is provided in the middle of a stroke, the switch operates when the piston speed is too high but the load may not be operated. In this case, decrease the speed or install an electric hold circuit.

◆ Interlock

When a switch is used for systems such as an interlock, design it in consideration of failures and malfunctions.

◆ Securing the maintenance space

Secure the space for operations such as switch adjustment and indicator check.

Mounting and adjustment

WARNING

◆ Switch handling

Impact to a switch such as by falling may result in breakage of the inside of the switch.

◆ Lead wire handling

Excess tensile force on a lead wire may result in lead wire breakage in the cable or breakage of the inside of a switch.

◆ Switch fixing tightening torque

Tightening the switch fixing screw or mounting bracket with a torque larger than the specified torque may result in switch breakage. Insufficient torque may result in out of mounting position in use. Follow the specified tightening torque for each switch.

◆ Switch setting position

Adjust the switch mounting position so that the piston stops in the center of the operation range (ON range). (The mounting position specified in the catalogue shows the optimal position in the stroke end.) When it is set in the end of the operation range (around the ON/OFF border line), operation may be unstable.

Wiring

WARNING

◆ Lead wire wiring

To install a switch in the movable area, take some wiring measures such as allowing extra cable length and replaceable cables. When wire is bundled with air pipes by a spiral tube, unreasonable force may be applied to the wires. Therefore, allow extra length of wires in this case.

◆ Load connection

Operating a 2 wire system switch while connecting it directly to the power without connecting any load such as a relay and a sequence controller may result in instant overcurrent, thus resulting in switch breakage.

◆ Short-circuit of load

Operating a switch with a short-circuited load will cause the flow of overcurrent, thus resulting in switch breakage.

◆ Polarity

In case of DC, wires have polarity. Brown lead wires are (+) and blue lead wires are (-). When wires are connected reversely in the contact switch, the switch operates but the light-emitting diode does not illuminate. When wires are connected reversely in the solid state switch, the switch does not operate and the internal circuit may be broken.
When the power wire (brown) and the output wire (black) are connected reversely in the 3 wire system switch, the switch will be broken.

Switch Precaution ②

Please read the following instructions before use.

Usage environment

DANGER

◆ Use in the hazardous atmosphere

Do not use switches in the explosive gas atmosphere. Switches do not have an explosion-proof structure. Do not use them in the explosive gas atmosphere because doing so may result in explosion.

WARNING

◆ Use in a powerful magnetic field

Use of a switch in a powerful magnetic field will result in switch operation failure and malfunctions because the internal magnetic force and the magnetic field distribution change.

◆ Adjacent of magnetic body

Note that when there is a large amount of iron power (e.g. chips, welding spatters) accumulated around the switch cylinder or magnetic bodies (attracted to the magnet) are adjacent to the switch cylinder, the magnetic force inside the cylinder is deprived so the switch may not operate.

◆ Usage environment

The water proof property of the switch is applicable to the IEC Standard IP66 (JIS C0920 Water Proof Type). However, if they are constantly exposed to water, insulation failure may occur. When they are exposed to oil (e.g. cutting oil) or chemical or in such atmosphere, lead wire hardening or insulation failure may occur.

◆ Impact

If excessive impact is applied to a contact switch in use, the contact may cause malfunction. Such failures will be reduced by using no-contact switches, but you must check the impact-resistant values in the specifications before doing so.

◆ Surge generating places <Solid State>

When there is a large surge generating system (e.g. electromagnetic lifter, high-frequency induction furnace, motor) in the periphery of the cylinder with a no-contact switch, circuit elements inside the switch may deteriorate or break. Therefore, take measures against the surge (source of generation) and pay attention to confusion with other lines.

◆ Temperature change

Even when switches are used within the specified use temperature, extreme environmental temperature changes may have a bad influence on the parts inside the switch.

Maintenance and check

WARNING

◆ Screw and hardware looseness check

Looseness of a switch mounting screw and hardware will result in switch displacement, thus causing unstable operation and malfunction. After setting the position again, tighten them with a specified torque.

◆ Lead wire breakage check

Damaged lead wire coating may result in insulation failure or breakage. Replace the switch or repair the lead wire immediately.